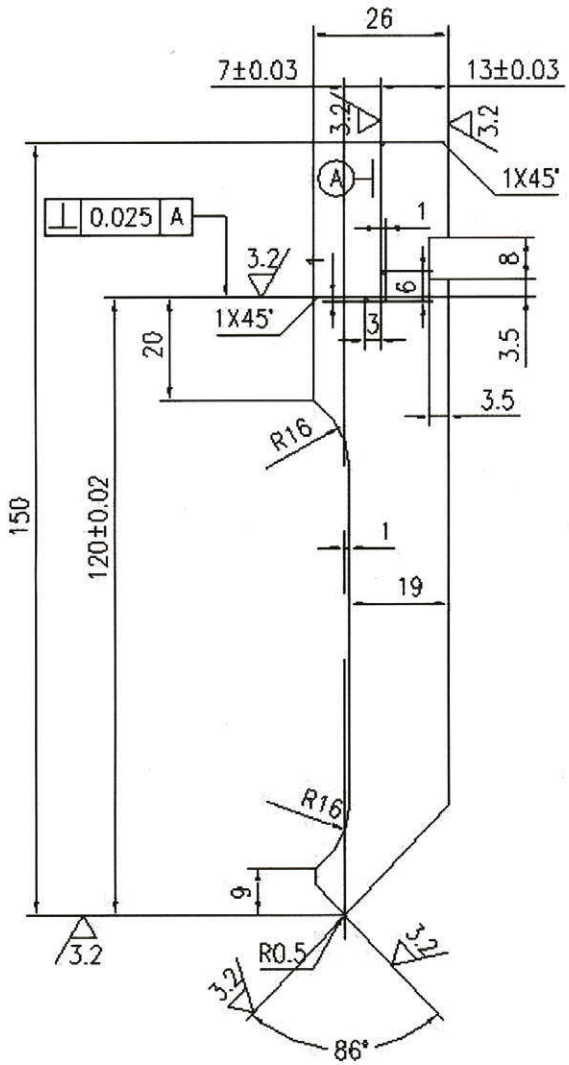
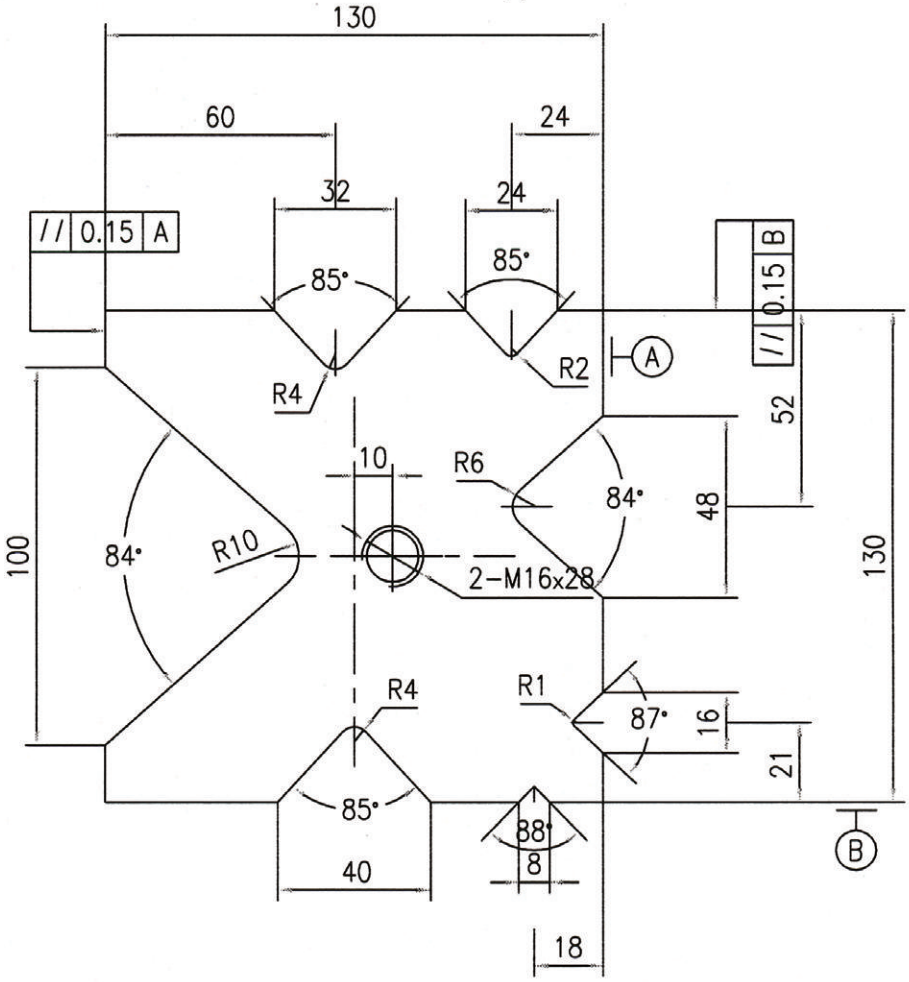
S912
PB-200B
220T x 4000mm